TRIVAL ANTENE

AUTHORIZED USA DISTRIBUTION BY:

Cyntony Corporation
195 Follen Road
Lexington, Massachusetts
sales@cyntony.com
781-430-0675

cyntony
customer attuned

AD-10/D

The antenna AD-10/D is a wideband UHF antenna for the frequency range from 500 to 3000 MHz, mainly intended for base station use. The antenna is composed of two main parts: attachment pipe with console and radiating element. The attachment pipe is made of aluminium tube diameter of 40 mm. The radiating element is enclosed in a tube made of composite material. The antenna is painted with black two-component UV resistant PU paint. The antenna has N female coaxial connector mounted at the end of the antenna attachment pipe. Attachment piper has a special mounting console adapter enables mounting the antenna on the mast with diameter up to 60 mm.

ELECTRICAL SPECS	
Frequency range	500 - 3000 MHz
Impedance	50 ohm
VSWR	< 2.5
Gain	1 - 2.5 dBi
Polarization	Vertical
Maximum power	500 W (500 MHz) .... 200 W (3000 MHz) CW
Connector	N female
MECHANICAL SPECS	
Design	Dipole (Center-Fed) Antenna
Height	500 mm
Weight	3 kg
Diameter	89 mm
Temperature range - in use	-50 ... +55C
Temperature range - in stock	-55 ... +75C
Wind rating	55 m/s (200 km/h)
Color	Black



TRIVAL ANTENE d.o.o., Gorenjska c. 25, 1234 MENGES, SLOVENIA; tel. +386-1-8314-396; fax. +386-1-8313-377
email: info@trivalantene.si; www.trival-antennas-mast.com

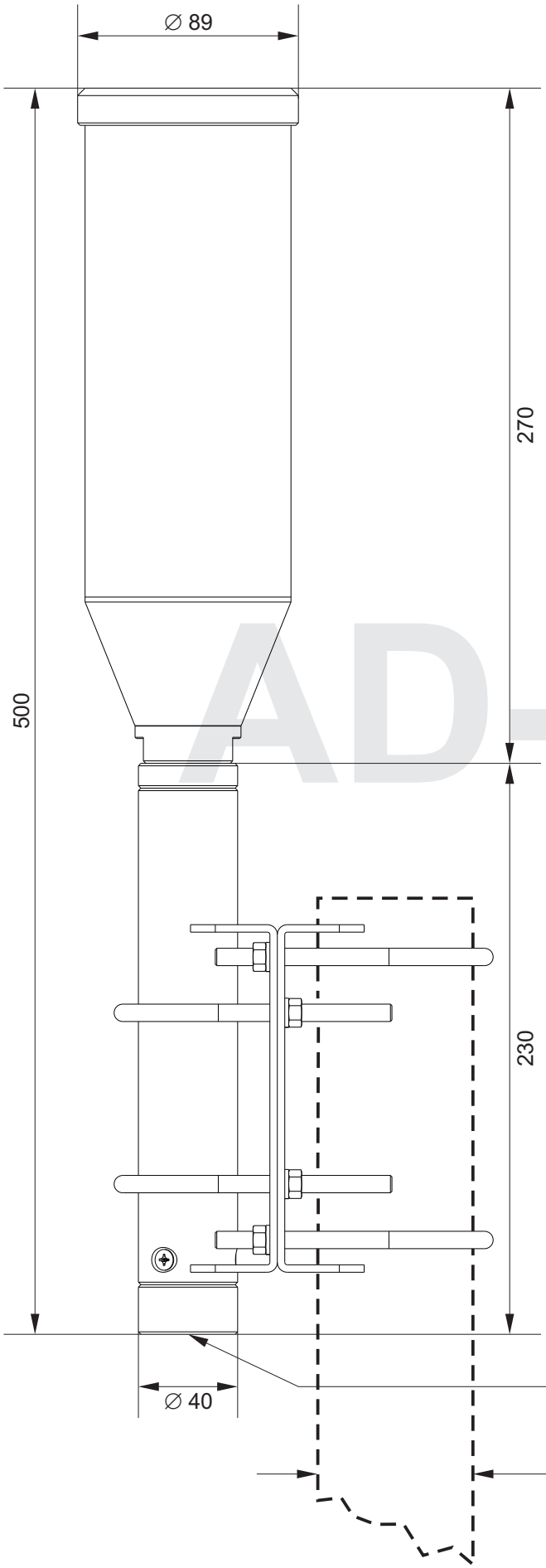

VSWR

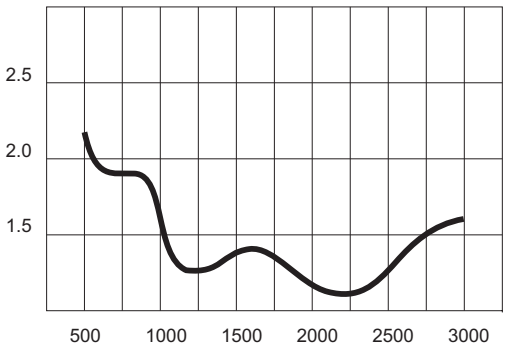

Gain (dBi)

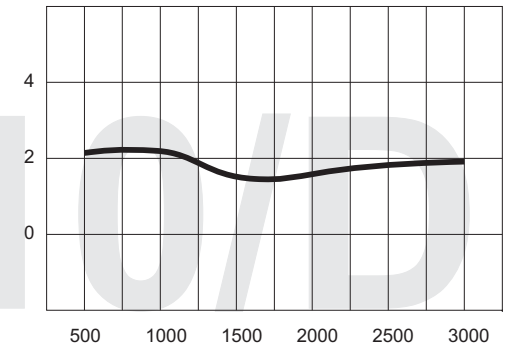

AD-10/D

AUTHORIZED USA DISTRIBUTION BY:
Cyntony Corporation
195 Follen Road
Lexington, Massachusetts
sales@cyntony.com
781-430-0675
cyntony
customer attuned