TRIVAL ANTENE

AUTHORIZED USA DISTRIBUTION BY:

Cyntony Corporation
195 Follen Road
Lexington, Massachusetts
sales@cyntony.com
781-430-0675

cyntony
customer attuned

AD-10/E

The antenna AD-10/E is a wideband UHF/SHF antenna for the frequency range from 400 to 6000 MHz, mainly intended for base station use. The antenna is composed of two main parts: attachment pipe with console and radiating element. The attachment pipe is made of aluminium tube diameter of 40 mm. The radiating element is enclosed in a tube made of composite material. The antenna is painted with black two-component UV resistant PU paint. The antenna has N female coaxial connector mounted at the end of the antenna attachment pipe. Attachment pipe has a special mounting console adapter enables mounting the antenna on the mast with diameter up to 60 mm.



ELECTRICAL SPECS	
Frequency range	400 - 6000 MHz
Impedance	50 ohm
VSWR	< 2.5
Gain	-2 ... +4 dBi
Polarization	Vertical
Maximum power	500 W (500 MHz) .... 50 W (6000 MHz) CW
Connector	N female
MECHANICAL SPECS	
Design	Dipole (Center-Fed) Antenna
Height	590 mm
Weight	3,1 kg
Diameter	78 mm
Temperature range - in use	-50 ... +55C
Temperature range - in stock	-55 ... +75C
Wind rating	55 m/s (200 km/h)
Color	Black

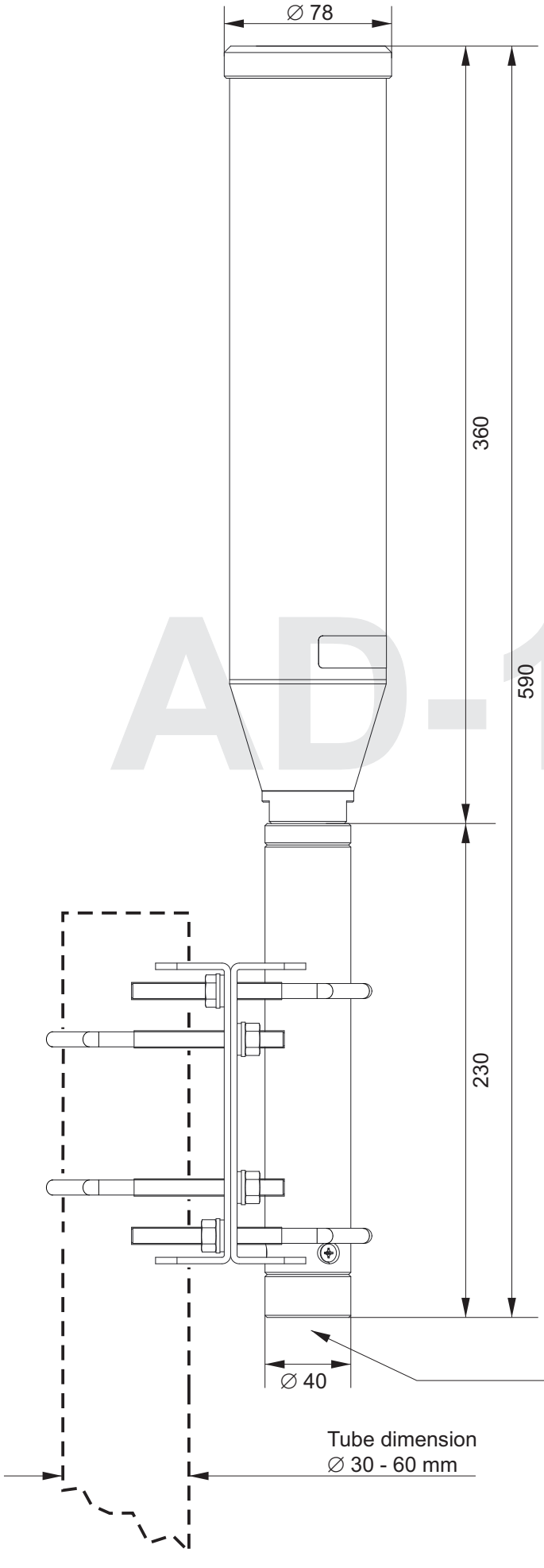

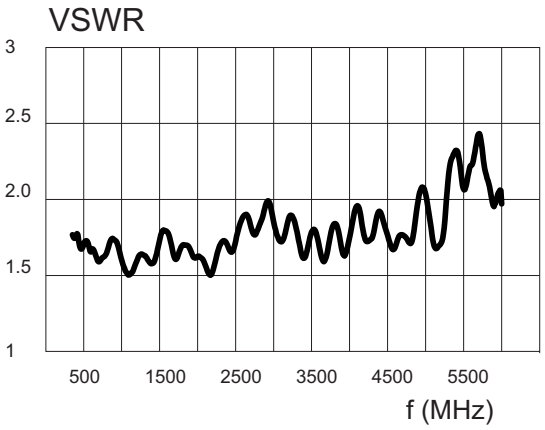

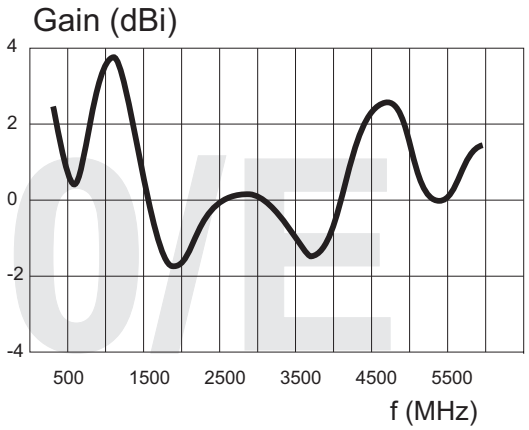

AD-10/E

AUTHORIZED USA DISTRIBUTION BY:
Cyntony Corporation
195 Follen Road
Lexington, Massachusetts
sales@cyntony.com
781-430-0675

cyntony
customer attuned