AD-18/H-1318

Rev. A



The antenna AD-18/H-1318 is a wideband dipole mobile antenna intended for use in the frequency range from 130 to 180 MHz, mainly intended for use in heavy duty mobile applications.
The antenna is composed from two main parts: the radiator and the antenna base. The radiator is made of 43 mm diameter fibreglass whip with special radiating elements firmly placed inside. The antenna base has built-in biconical spring enables resistivity against mechanical impacts. Electrically the antenna is designed as center-fed thus the electrical characteristics are independent from the ground or mounting place.
The antenna base has an option of additional built-in GPS active antenna. Stainless steel spring absorbs the shocks and the vibrations, in addition protects the antenna against impacts. The radiating element is made of composite materials enable outstanding strength and roughness even in hardest conditions of use.
The antenna base has four mounting holes equally spaced on a 4.5" (114.3 mm) circle which complies with NATO standard. Different base plate dimensions are available on request.
The antenna radiator is painted with military green (RAL-6014) two-component UV resistant paint.

ELECTRICAL SPECIFICATIONS - VHF:	
Frequency range	130 - 180 MHz
Impedance	50 ohms
VSWR	< 3
Gain	-1 .. +2 dBi
Polarization	vert.
Maximum power	100 W CW
Connector	N female (BNC female optional)
ELECTRICAL SPECIFICATIONS - GPS:	
Frequency range	L1 1575.42 +/- 10 MHz
Impedance	50 ohms
VSWR	< 2
Polarization	RHC
LNA Gain / Voltage / Current	18 dB (+/- 2 dB) / 5 V / 19 mA 16 dB (+/- 2 dB) / 3.5 V / 13 mA 10 dB (+/- 2 dB) / 2 V / 7 mA
Noise fig.	<1.5 dB
Connector	SMA female
MECHANICAL SPECIFICATIONS:	
Design	Center-fed dipole (VHF); patch antenna with LNA (GPS)
Height	1550 mm
Weight	4 kg
Max. high voltage rating	16 kV
Temperature range - in use	-50 ... +55 °C
Temperature range - in stock	-55 ... +75 °C
Wind rating	45 m/s (160 km/h)
Color	RAL-6014

VERSIONS:
AD-18/H-1318-N: VHF antenna (N female connector)
AD-18/H-1318-G-N: combined VHF (N female) and GPS L1 (SMA female) antenna
AD-18/H-1318-BNC: VHF antenna (BNC female connector)
AD-18/H-1318-G-BNC: combined VHF (BNC female) and GPS L1 (SMA female) antenna

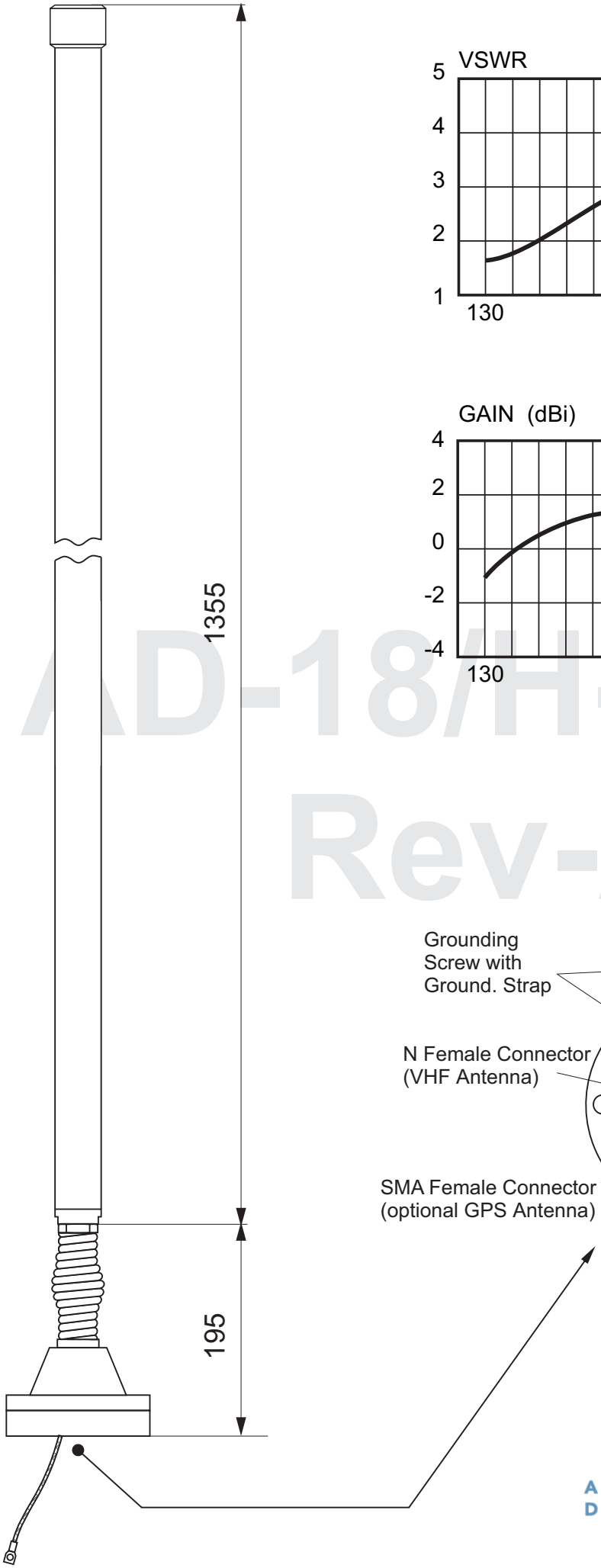

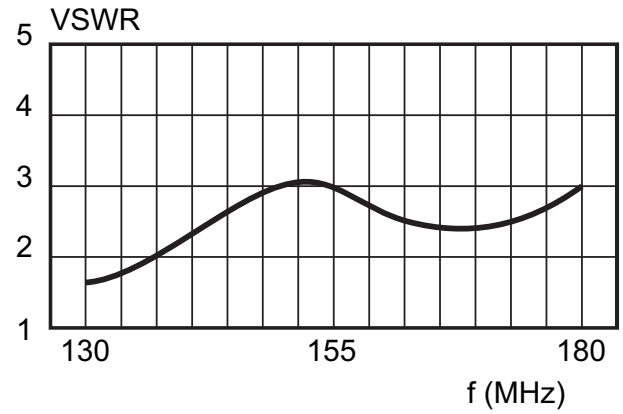

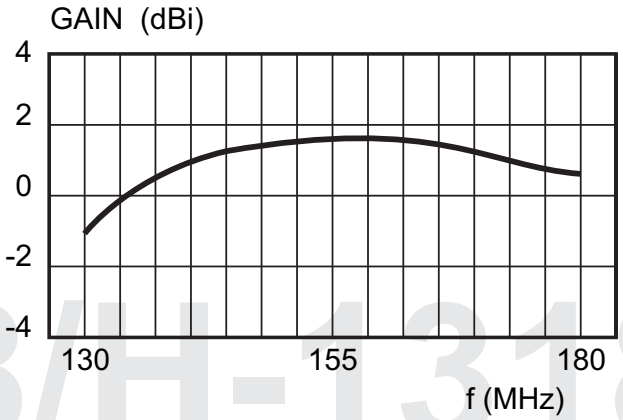

AD-18/H-1318
Rev-A

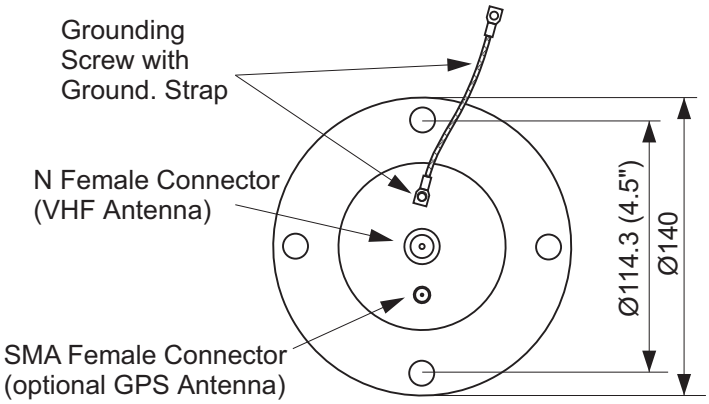

ANTENNA BASE -
BOTTOM VIEW

AUTHORIZED USA
DISTRIBUTION BY:
Cyntony Corporation
195 Follen Road
Lexington, Massachusetts
sales@cyntony.com
781-430-0675

cyntony
customer attuned