TRIVAL ANTENE

AUTHORIZED USA DISTRIBUTION BY:
Cyntony Corporation
195 Follen Road
Lexington, Massachusetts
sales@cyntony.com
781-430-0675

cyntony
customer attuned

AD-22/A
Rev. A

The antenna AD-22/A is a log-periodic dipole antenna covering frequency range from 100 to 512 MHz. The antenna is composed of a boom element and 11 dipoles connected to the boom by special screw joints. All dipole elements and boom are made of aluminum alloy and joints are made of stainless steel. Beside that there is also an antenna support mounted on the boom element, constructed for easy change of the antenna polarization.
The antenna support enable mounting the antenna on masts with outer diameter between 20 and 60 mm. The antenna is primarily intended for stationary use due to construction of elements and materials enabling long life.
All metal parts of the antenna are painted with UV resistant polyurethane paint.

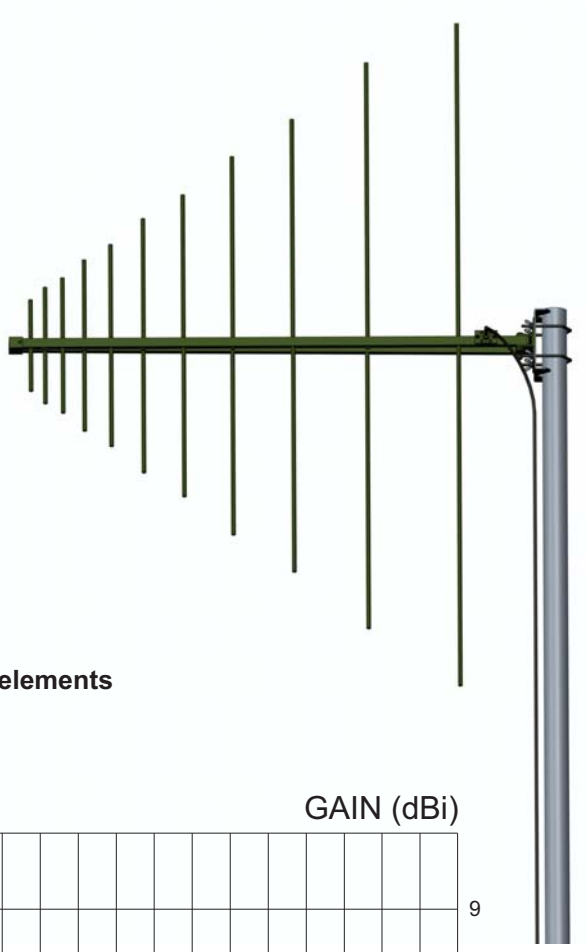

Versions:
- AD-22/A: antenna without canvas bag
- AD-22/A-T: antenna with canvas bag for boom and dipole elements

Frequency range	100 - 512 MHz
Impedance	50 ohm
VSWR	typ. < 1.5
Gain	6 - 7 dBi
Front-to-back ratio	> 20 dB
Polarization	HOR./VER.
Maximum power	500 W CW
Connector	N female
Length	1,25 m
Width	1,6 m
Mass	4 kg
Wind velocity	120 km/h
Temperature range	-55...+80 °C

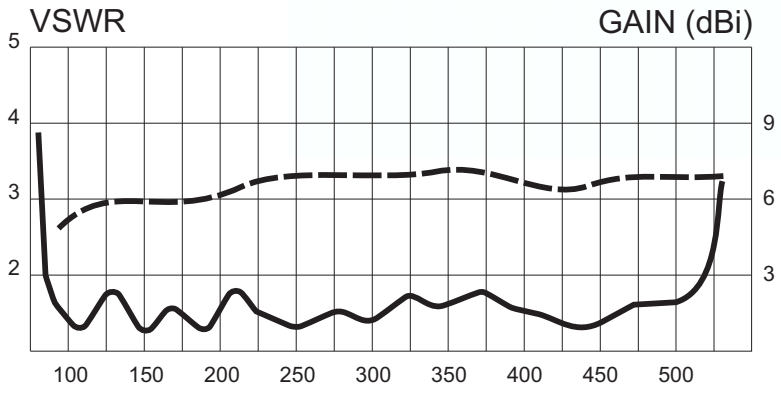



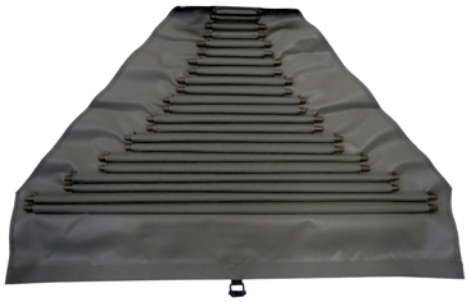



TRIVAL ANTENE d.o.o., Gorenjska c. 25, 1234 MENGES, SLOVENIA; tel. +386-1-8314-396; fax. +386-1-8313-377
email: info@trivalantene.si; www.trival-antennas-mast.com

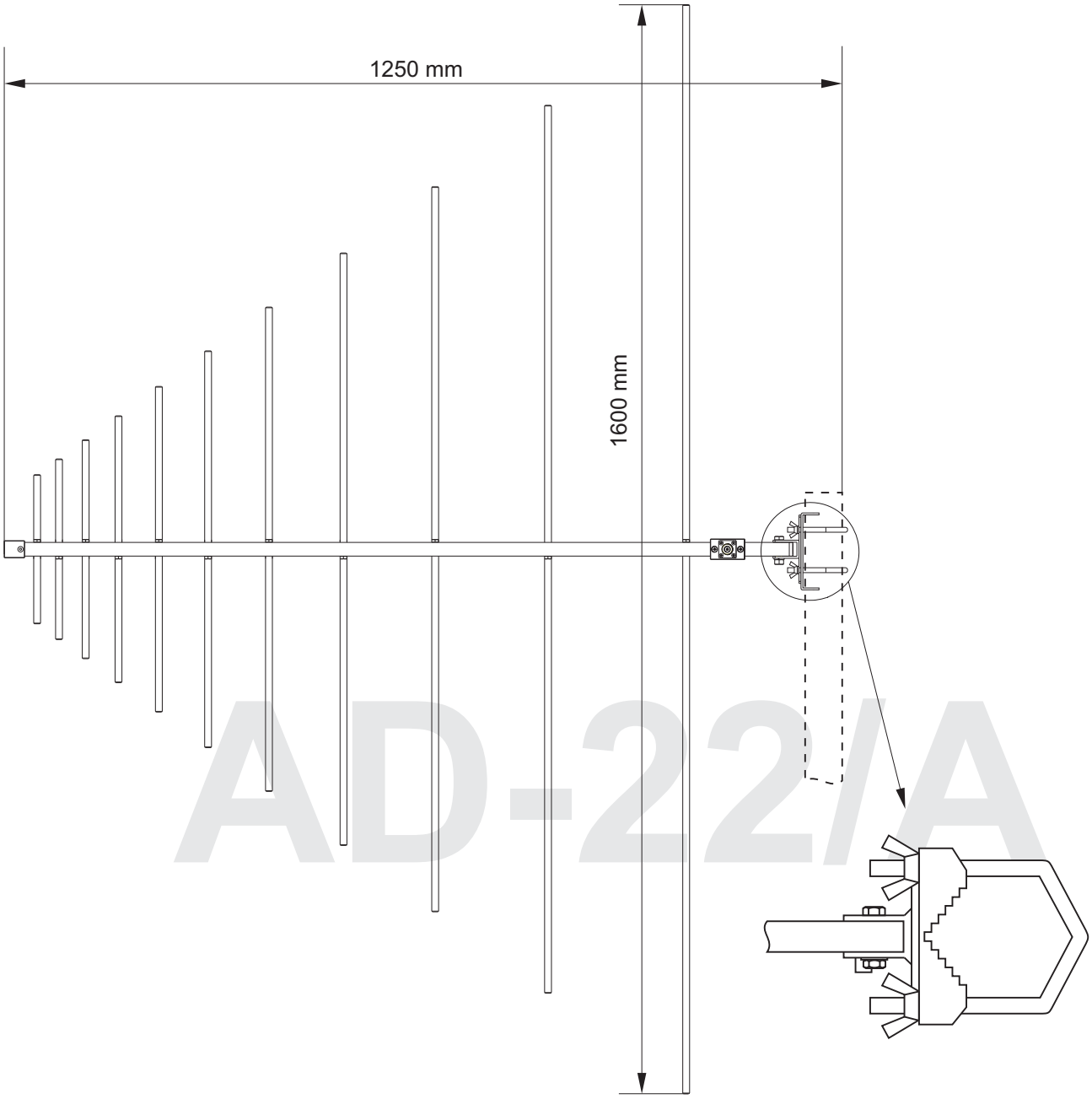
1250 mm
1600 mm

AD-22/A

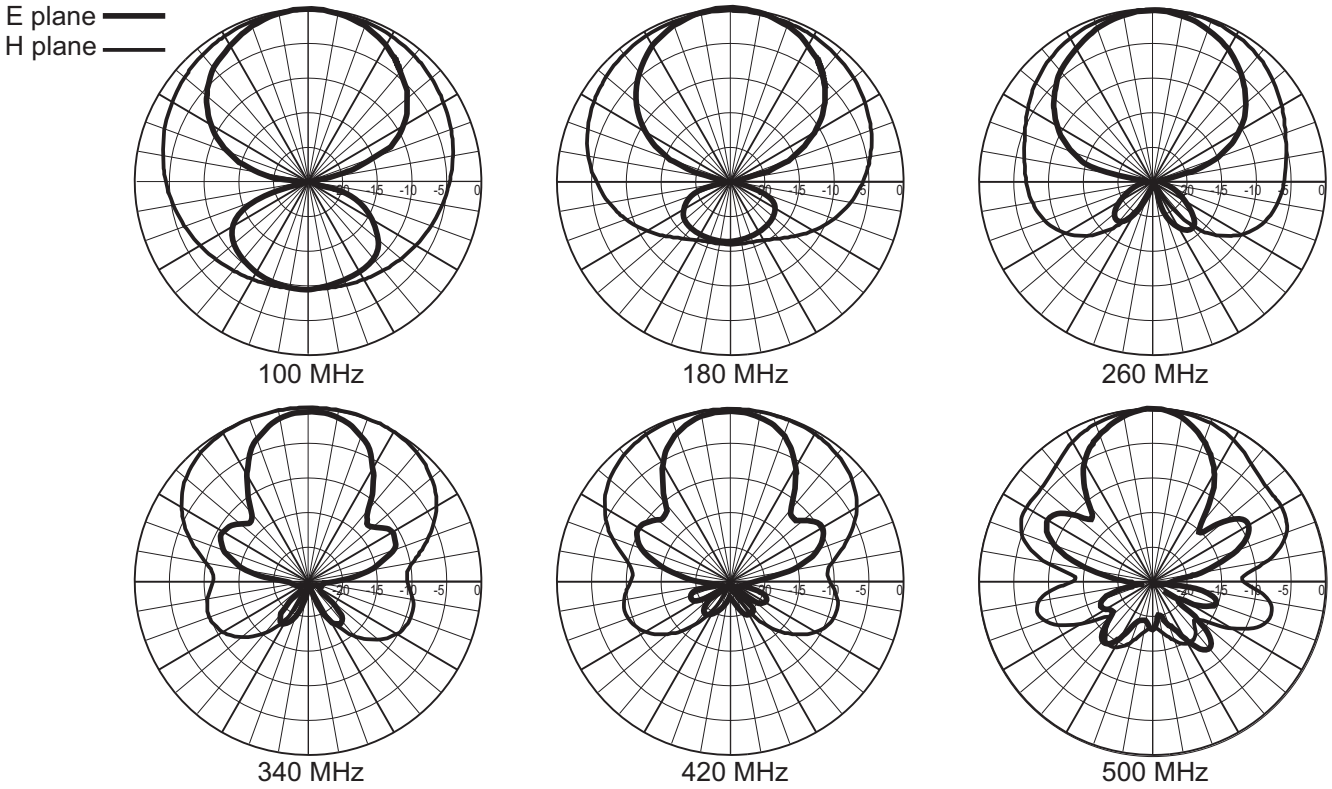
E plane
H plane
100 MHz
180 MHz
260 MHz
340 MHz
420 MHz
500 MHz