The antenna AD-22/B is a log-periodic dipole antenna covering the frequency range from 225 to 512 MHz. The antenna is mainly intended for use for broadcast, EMC applications, radio monitoring, jamming, etc.
The antenna is composed of a boom element and 7 dipoles. All dipole elements and boom are made of aluminium alloy, protected with irridite finnish and painted with two component UV resistant PU paint. The antenna support on the end enables mounting on masts with outer diameter between 1" (26 mm) and 2" (60 mm). The antenna is primarily intended for stationary use due to construction of elements and materials enabling long life. All metal parts of the antenna are painted with UV resistant polyurethane paint.

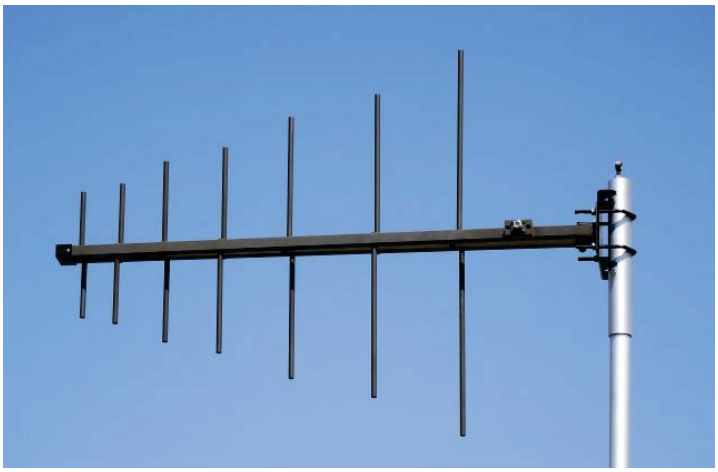

Versions:
AD-22/B: antenna without canvas bag
AD-22/B-T: antenna with canvas bag for boom and dipole elements

TECHNICAL CHARACTERISTICS	
Frequency range	225 - 512 MHz
Impedance	50 ohm
VSWR	typ. < 1.5:1
Gain	7 dBi
Front-to-back ratio	> 20 dB
Polarization	HOR./VER.
Maximum power	500 W CW
Connector	N female
Length	1,0 m
Width	0,74 m
Mass	2.2 kg
Wind velocity	
- operational	120 km/h
- survival	160 km/h
Temperature range	-55...+80 °C

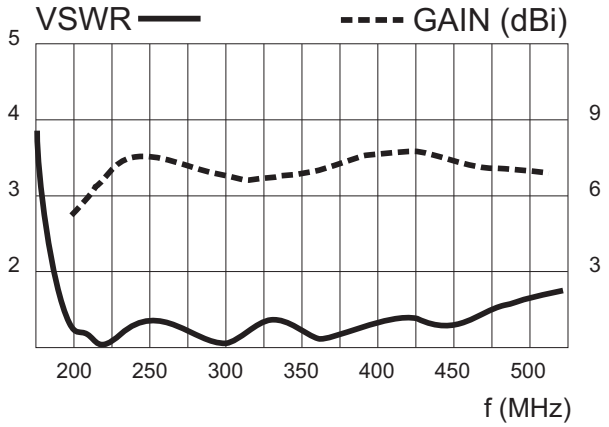

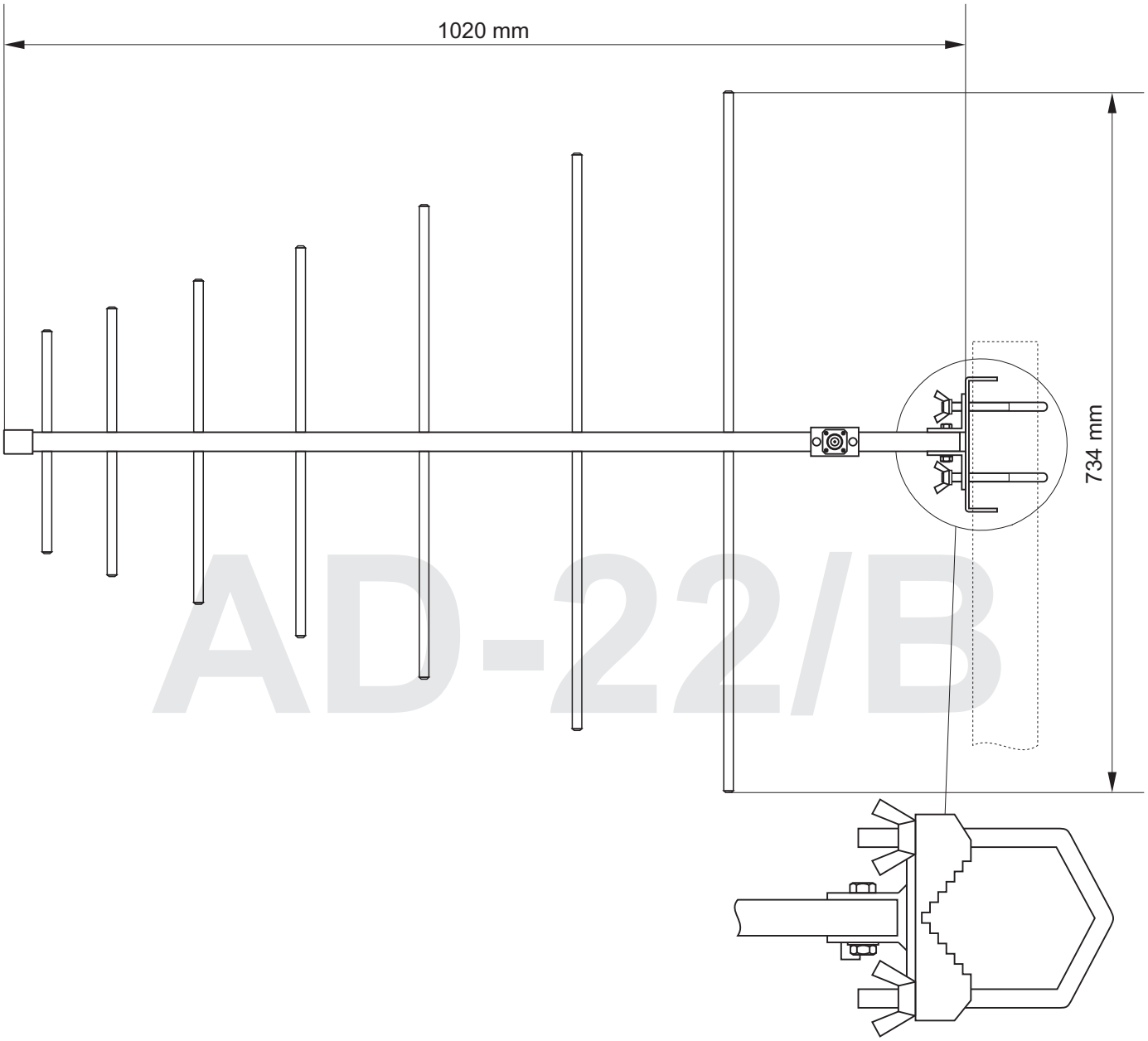
1020 mm
734 mm

AD-22/B

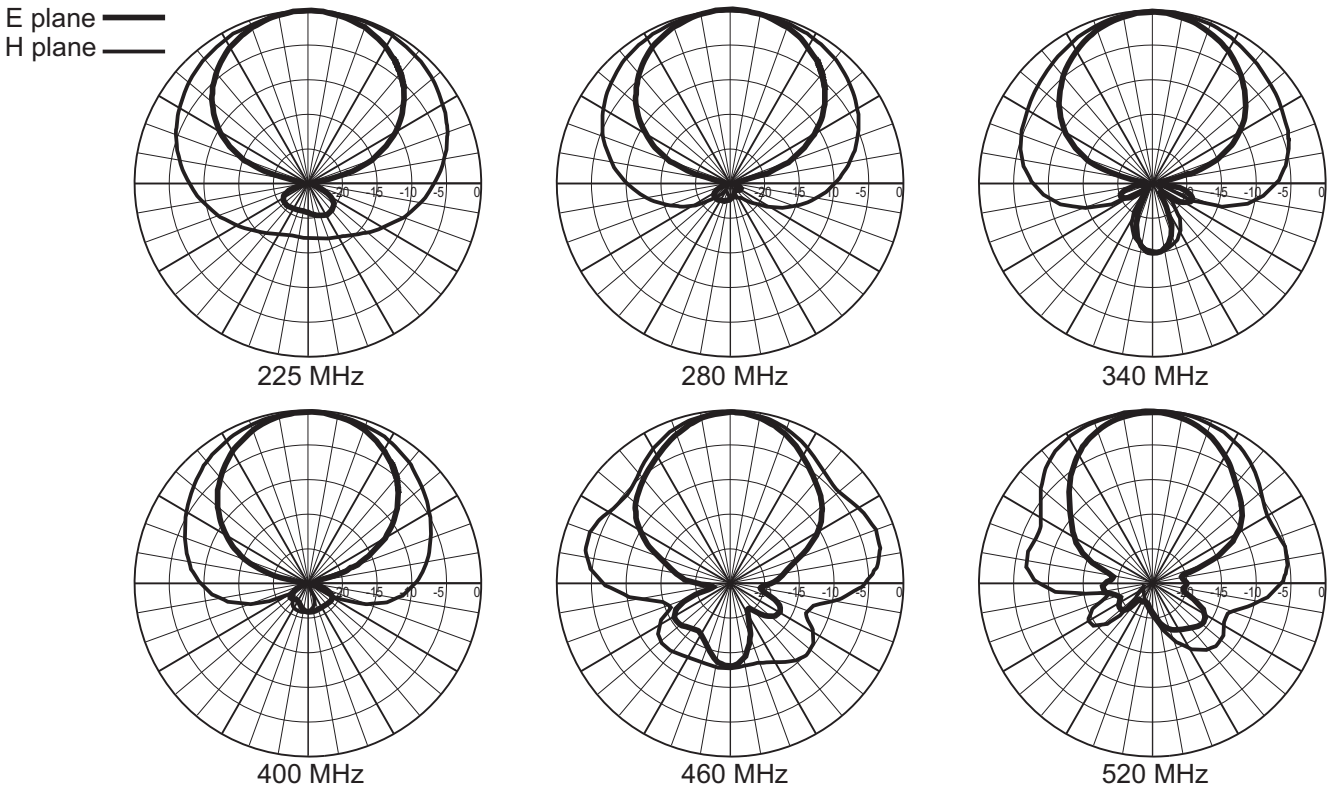
E plane
H plane
225 MHz
280 MHz
340 MHz
400 MHz
460 MHz
520 MHz