AD-79/18D

Rev. A

The antenna AD-79/18D is a mobile GPS active receiving antenna intended for use with mobile and portable GPS receivers. The active parts with the ceramic patch antenna are enclosed in the ABS radome. Stainless steel mounting adapter has M10 thread with washers and nut for easy mounting. The antenna could be used as standalone or in combination with our standard VHF/UHF broadband mobile antennas type AD-18/D, AD-27 or AD-18/E. With these antennas the AD-79/18D could be placed on the existing antenna base instead of one M10 mounting screw - no need to drill additional mounting hole.
The antenna has up to 5 m of RG-316 coaxial cable with SMA female connector. Other connector types and coaxial cable lengths are available on request.

Frequency range	1575.42 +/- 10 MHz (L1)
Impedance	50 ohms
VSWR	< 2
Polarization	RHC
LNA Gain @ power	18 dB (+/- 2 dB) / 5 V / 19 mA 16 dB (+/- 2 dB) / 3.5 V / 13 mA 10 dB (+/- 2 dB) / 2 V / 7 mA
Noise fig.	< 1.5 dB
Connector	SMA female
Dimensions	dia. 48 mm x 110 mm
Weight	200 g
Colour	Black
Materials	ABS; Stainless Steel
Temperature range	- 40....+55 °C

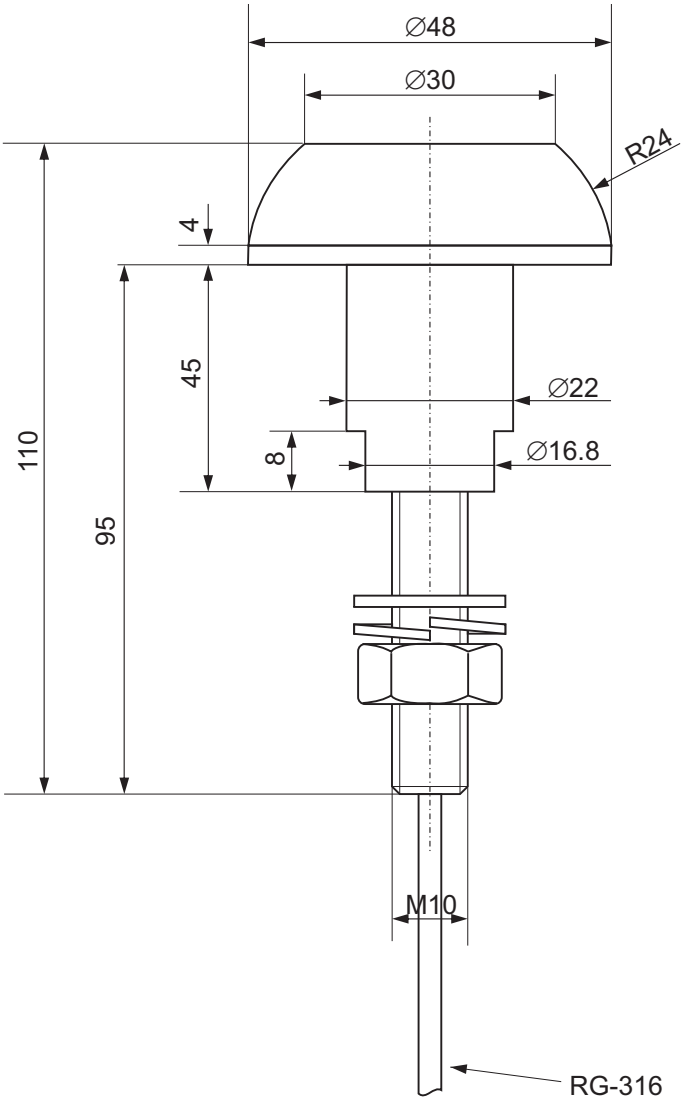

AUTHORIZED USA DISTRIBUTION BY:

Cyntony Corporation
195 Follen Road
Lexington, Massachusetts
sales@cyntony.com
781-430-0675

cyntony
customer attuned