AUTHORIZED USA DISTRIBUTION BY:
Cyntony Corporation
195 Follen Road
Lexington, Massachusetts
sales@cyntony.com
781-430-0675
cyntony
customer attuned

TRIVAL ANTENE

AD-18/G-40600

The antenna AD-18/G-40600 is a wideband UHF/SHF antenna for frequency range from 400 to 6000 MHz, mainly intended for use in heavy duty mobile applications. The antenna is composed of two main parts: the antenna base and the radiating element. The antenna base is made of aluminum and durable plastic materials. Inside the base is mounted (optional) GPS antenna. Stainless steel spring absorbs shocks and vibrations. Radiating elements are made of aluminum alloy and are enclosed inside epoxy composite tube enable outstanding strength and roughness even in hardest conditions of use. The antenna base has four mounting holes equally spaced on a 4.5" (114.3 mm) circle which complies with NATO standard. Different base plate dimensions are available on request. The antenna radiator is painted with black PU two-component UV resistant paint.

ELECTRICAL SPECS - UHF	
Frequency range	400 - 6000 Mhz
Impedance	50 ohm
VSWR	< 2.5
Gain	-2 ... +4 dBi
Polarization	Vertical
Maximum power	500 W (500 MHz) .... 50 W (6000 MHz) CW
Connector	N female
ELECTRICAL SPECS - GPS	
Frequency range	L1 1575.42 +/- 10 MHz
Impedance	50 ohm
VSWR	<2
LNA Gain / Voltage / Current	18 dB (+/- 2 dB) / 5 V / 19 mA 16 dB (+/- 2 dB) / 3.5 V / 13 mA 10 dB (+/- 2 dB) / 2 V / 7 mA
Polarization	RHC
Noise fig.	<1.5 dB
Connector	SMA female
MECHANICAL SPECS	
Design	Dipole (Center-Fed) Antenna
Height	557 mm
Weight	3.3 kg
Max Radiator Diameter	78 mm
Temperature range - in use	-50 ... +55 °C
Temperature range - in stock	-55 ... +75 °C
Wind rating	45 m/s (160 km/h)
Color	Black

VERSIONS:
AD-18/G-40600-N: UHF/SHF Antenna
AD-18/G-40600-G-N: combined UHF/SHF and GPS Antenna

AUTHORIZED USA DISTRIBUTION BY:
Cyntony Corporation
195 Follen Road
Lexington, Massachusetts
sales@cyntony.com
781-430-0675
cyntony
customer attuned

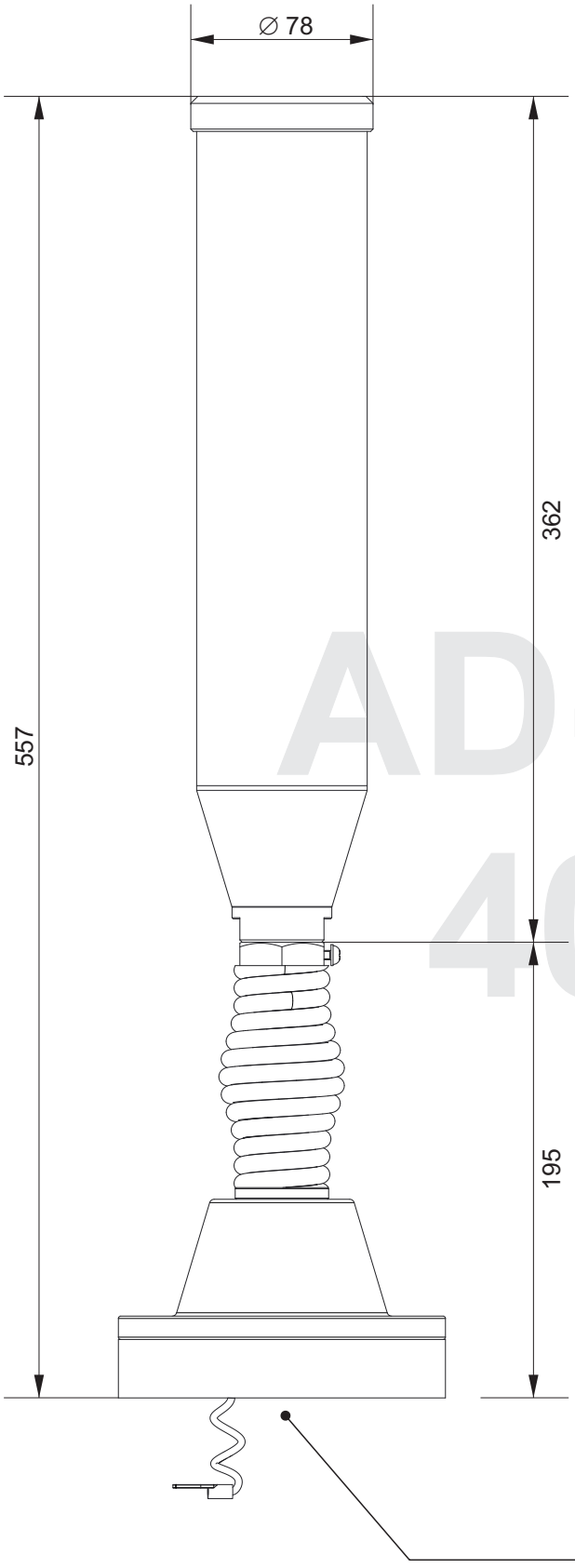

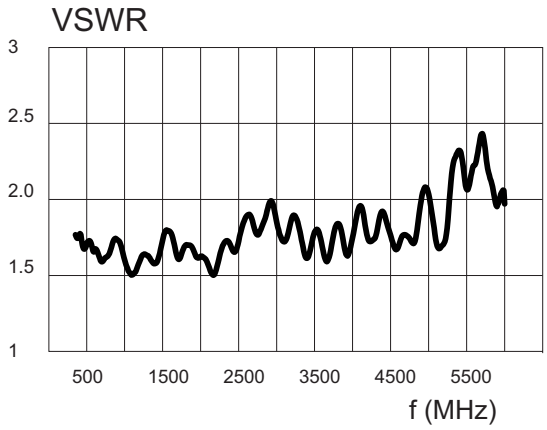

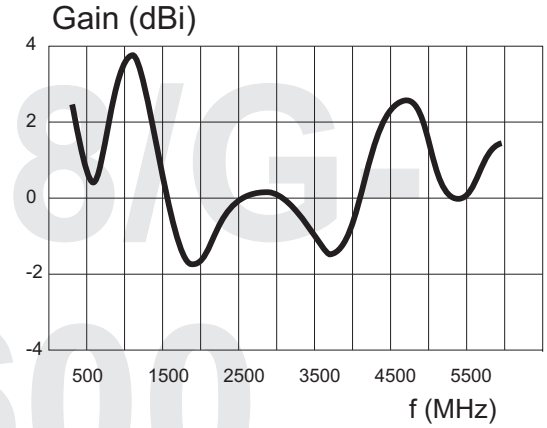

AD-18/G-
40600

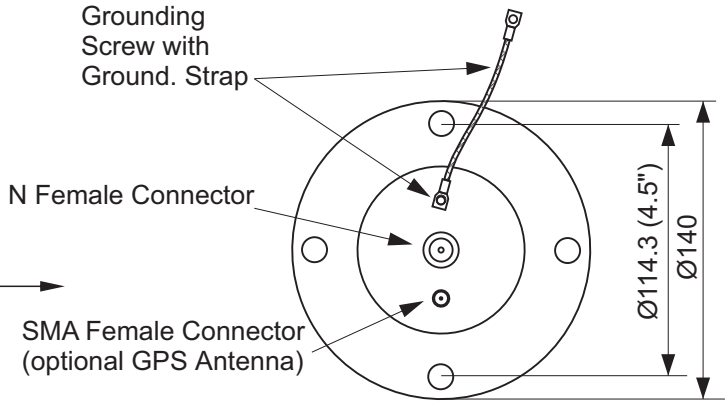

ANTENNA BASE -
BOTTOM VIEW

AUTHORIZED USA
DISTRIBUTION BY:
Cyntony Corporation
195 Follen Road
Lexington, Massachusetts
sales@cyntony.com
781-430-0675

cyntony
customer attuned